moooi

Paper Buffet

Did the idea of paper furniture ever strike your mind? Paper, cardboard and papier-mâché are familiar to all of us. They bring back memories of kindergarten and our first experiences of making things.

Designer	Studio Job
Year of design	2005
Material	honeycomb panels paper and cardboard

detailing

The Paper collection illustrates it's story with a lacquered paper finish.

technical

The construction of the Paper furniture is intelligent and easy to assemble. Each component slots into the other which enables one part to bare it's weight and share it's strength with the another. There are no screws, no nuts and no bolts.

colours

White

RAL 5008

cleaning instructions

To clean the Paper furniture you should dust with a dry micro-fibre cloth, feather duster or similar. A damp cloth can also be used to remove dirt and grease. Always read the label of any cleaning products you wish to use on or near any item from the Moooi collection. For further advice on how to clean this product, please contact your nearest Moooi agent/dealer or you can contact our sales team via the website.

packaging

H 165 cm | 65.0” W 83 cm | 32.7” D 20 cm | 7.9”	H 165 cm | 65.0” W 53 cm | 20.9” D 15 cm | 5.9”	H 171 cm | 67.3” W 67 cm | 26.4” D 26 cm | 10.2”
Colli 1/3	Colli 2/3	Colli 3/3
Product weight: 18 KG | 40lb	Product weight: 17 KG | 37lb	Product weight: 17 KG | 37lb
With packaging: 21.5 KG | 47lb	With packaging: 20 KG | 44lb	With packaging: 20 KG | 44lb
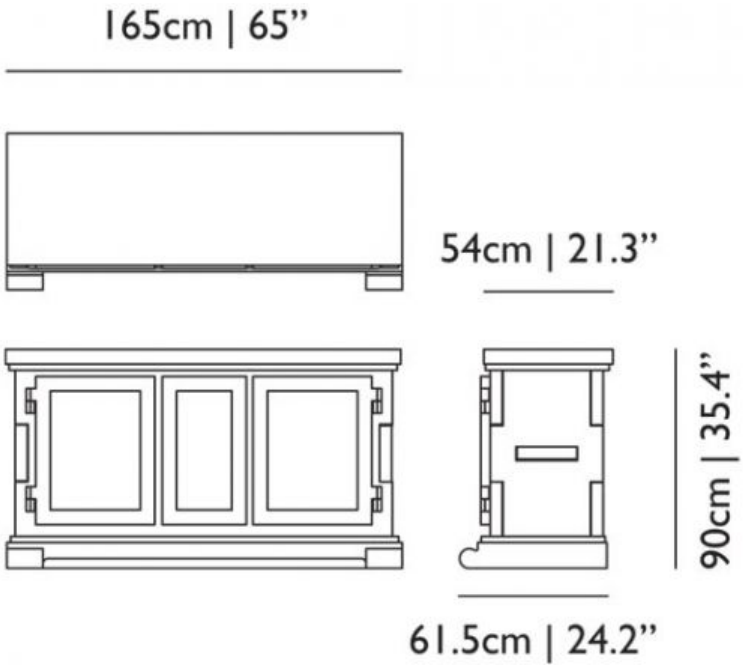
dimensions