ÎLE

design by Studio 28

Tonin CASA

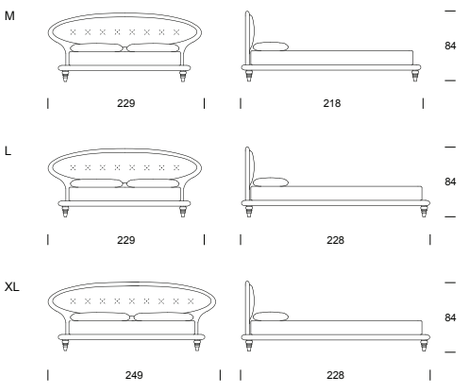

Misure_Sizes

M	Materasso/mattress 160x190	L 229 P 218 H 84
L	Materasso/mattress 160x200	L 229 P 228 H 84
XL	Materasso/mattress 180x200	L 249 P 228 H 84

ÎLE_ART. 7860 M/L/XL

RIVESTIMENTO
COVERING

PELLE
LEATHER

P1 BIANCO WHITE
P2 NERO BLACK
P3 ROSSO RED
P4 GIALLO YELLOW
P5 PANNA CREAM
P9 ROSSO BORDEAUX BURGUNDY RED
P13 NOCCIOLA HAZEL
P29 GRIGIO GABBIANO GULL GREY
P34 OTTANIO OIL BLU
P35 SALVIA SAGE
P36 BEIGE BEIGE
P40 BLU TURCHESE TURQUOISE BLUE
P42 VERDE SCURO DARK GREEN
P46 VERDE PINO PINE GREEN
P52 LAVANDA LAVENDER
P60 MARRONE CHIARO LIGHT BROWN
P61 CHAMPAGNE CHAMPAGNE
P66 FUCSIA FUCHSIA
P70 TESTA DI MORO DARK BROWN
P73 GRIGIO GREY
P77 VIOLA PURPLE

PELLE FIORE
GRAIN LEATHER

PF1 BIANCO WHITE
PF2 NERO BLACK
PF3 ROSSO RED
PF4 GIALLO YELLOW
PF5 PANNA CREAM
PF6 ROSA PINK
PF18 SABBIA SAND
PF27 GRIGIO CEMENTO ASH GREY
PF29 GRIGIO GABBIANO GULL GREY
PF33 COBALTO COBALT
PF34 OTTANIO OIL BLU
PF41 ROSSO CICLAMINO CYCLAMEN RED
PF42 VERDE SCURO DARK GREEN
PF47 CIPRIA POWDER
PF63 DESERTO DESERT
PF65 ROSSO MATTONE BRICK RED
PF68 AMBRA AMBER
PF70 TESTA DI MORO DARK BROWN
PF75 MARRONE BROWN
PF77 VIOLA PURPLE

ECOPELLE
ECO-LEATHER

S01 BIANCO WHITE
S02 NERO BLACK
S03 ROSSO RED
S05 PANNA CREAM
S09 ROSSO BORDEAUX BURGUNDY RED
S13 NOCCIOLA HAZEL
S27 GRIGIO CEMENTO ASH GREY
S28 BIANCO AVANA HAVANA WHITE
S34 BLU BLUE
S36 BEIGE BEIGE
S40 BLU TURCHESE TURQUOISE BLUE
S42 VERDE SCURO DARK GREEN
S43 GRIGIO CHIARO LIGHT GREY
S44 BLU NOTTE NIGHT BLUE
S51 FANGO MUD
S59 GIALLO SENAPE MUSTARD YELLOW
S60 TORTORA DOVE-COLOUR
S66 FUCSIA FUCHSIA
S70 TESTA DI MORO DARK BROWN
S74 VERDE OLIVA OLIVE GREEN
S77 VIOLA MELANZANA PURPLE AUBERGINE

Scheda tecnica
Technical details