MURPHY

Product description

Modular sofa with wooden frame, polyurethane padding and thermoplastic feet. Cover in fabric as per sample card. Adaptable backrest cushions equipped with counterweights. Removable cover.

CATTELAN ITALIA s.p.a. - Via Pilastri 19, 36030 Carrè, Vicenza, Italy - Phone: +390445318711 - Fax: +390445314289 - E-mail: info@cattelanitalia.com - www.cattelanitalia.com

MURPHY

Dimensions

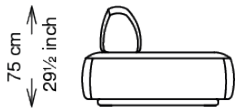

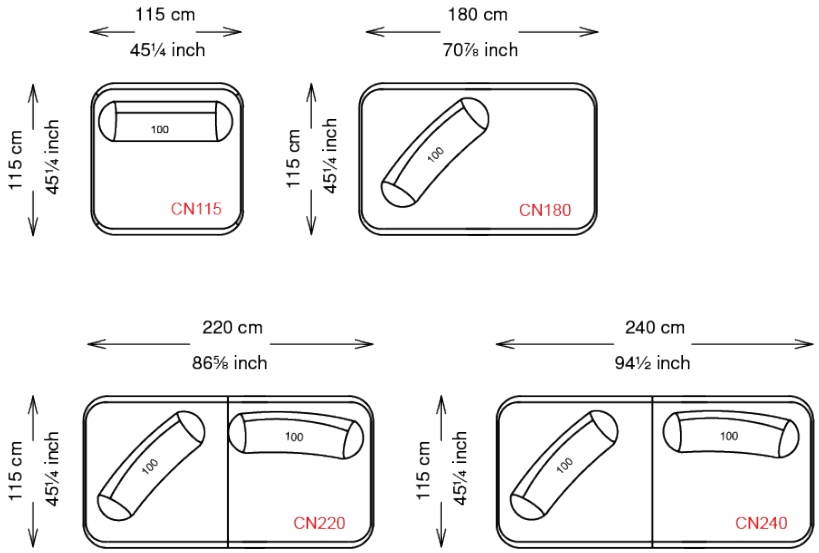

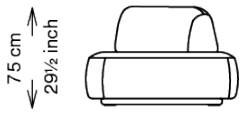

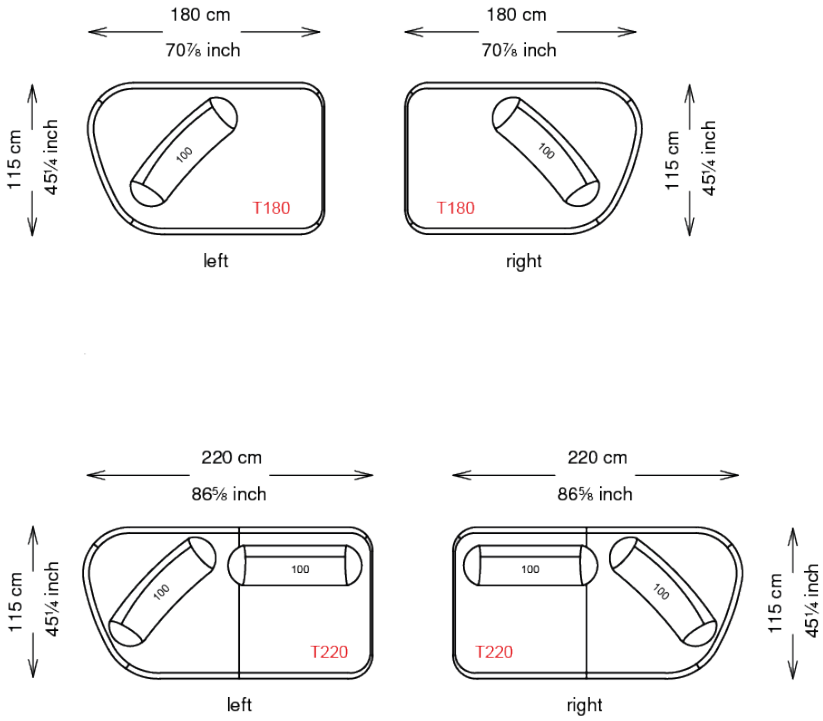

CATTELAN ITALIA s.p.a. - Via Pilastri 19, 36030 Carrè, Vicenza, Italy - Phone: +390445318711 - Fax: +390445314289 - E-mail: info@cattelanitalia.com - www.cattelanitalia.com

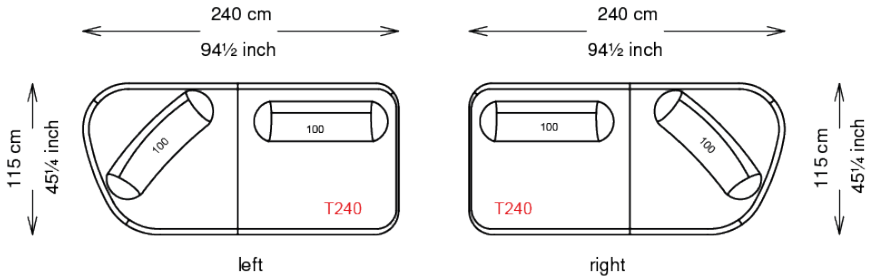
240 cm
94½ inch
115 cm
45¼ inch
100
100
T240
left
240 cm
94½ inch
100
100
T240
right
115 cm
45¼ inch

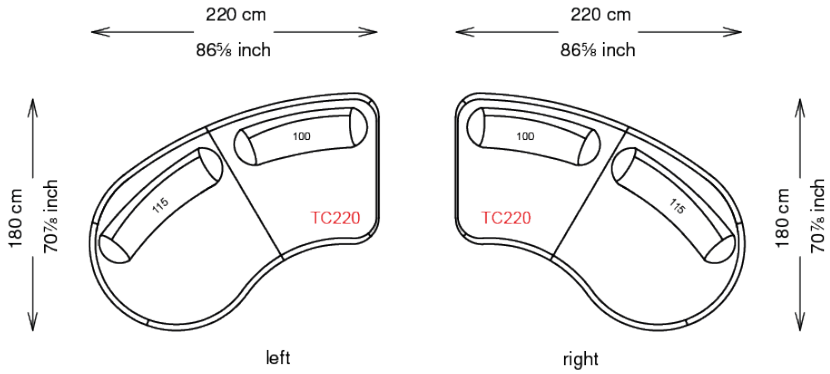
220 cm
86⅝ inch
180 cm
70⅞ inch
100
115
TC220
left
220 cm
86⅝ inch
100
115
TC220
right
180 cm
70⅞ inch

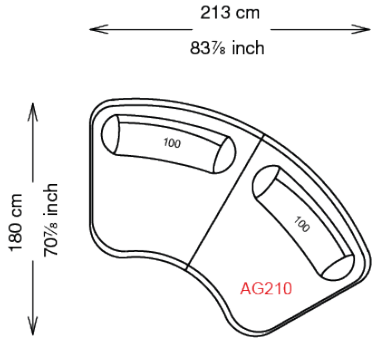
213 cm
83⅞ inch
180 cm
70⅞ inch
100
100
AG210

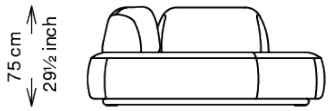
75 cm
29½ inch

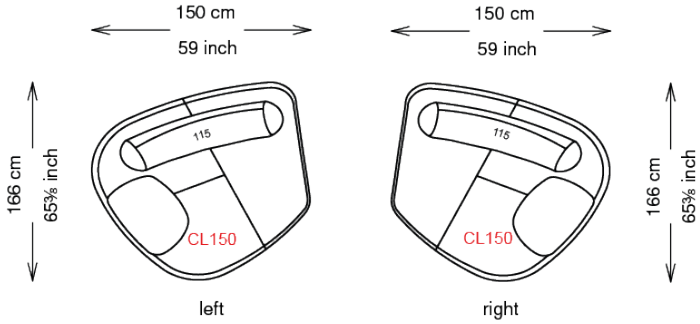
150 cm
59 inch
166 cm
65⅜ inch
115
CL150
left
150 cm
59 inch
115
CL150
right
166 cm
65⅜ inch

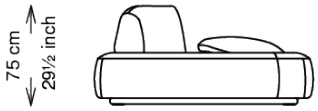
75 cm
29½ inch

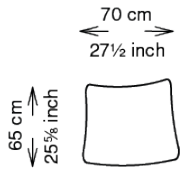

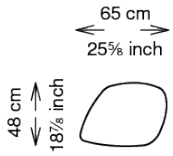

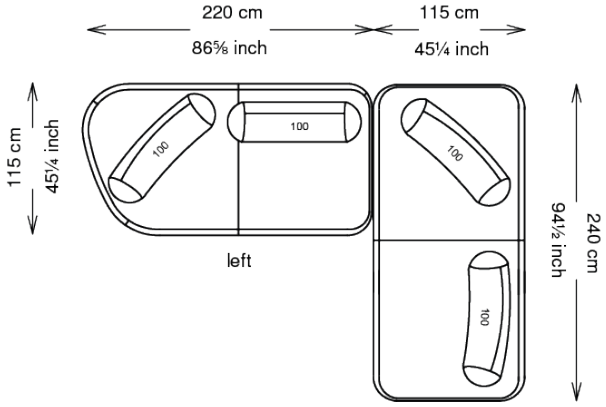

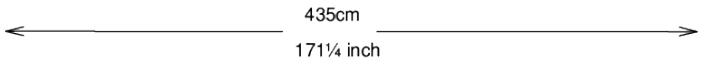

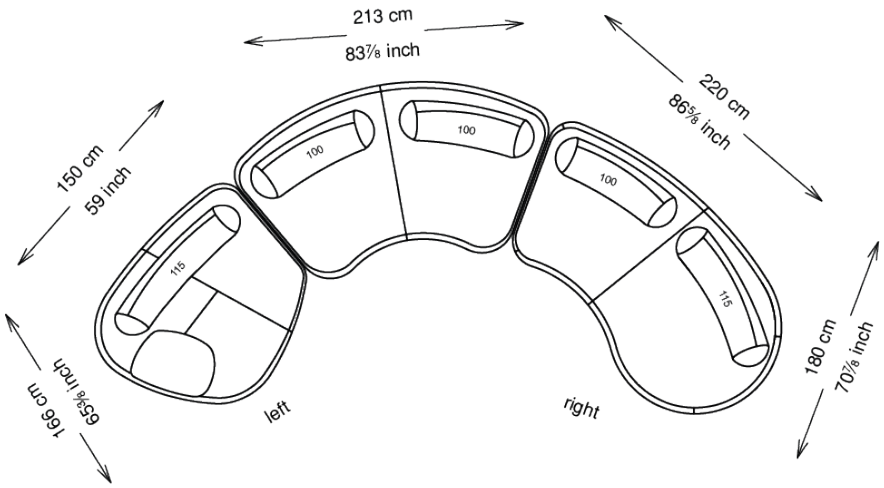

CATTELAN ITALIA s.p.a. - Via Pilastri 19, 36030 Carrè, Vicenza, Italy - Phone: +390445318711 - Fax: +390445314289 - E-mail: info@cattelanitalia.com - www.cattelanitalia.com

MURPHY

upholster

Sofa Fabric

T10

CATTELAN ITALIA s.p.a. - Via Pilastri 19, 36030 Carrè, Vicenza, Italy - Phone: +390445318711 - Fax: +390445314289 - E-mail: info@cattelanitalia.com - www.cattelanitalia.com

T20

B198

D186

B192

B199

B194

D077

F170

B135

B057

D046

F128

D051

D112

A005

B118

D184

F016

A154

F106

D113

F035

B067

B055

B072

T30

B091

D080

F119

D076

B116

F011
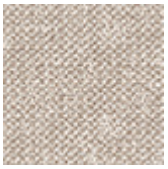
D183

B204

B059

D030

B159

D108

B158

B068

D052

B148

D081

F019

F171

B001

B056

B195

F089

F041

CATTELAN ITALIA s.p.a. - Via Pilastri 19, 36030 Carrè, Vicenza, Italy - Phone: +390445318711 - Fax: +390445314289 - E-mail: info@cattelanitalia.com - www.cattelanitalia.com

T40

D088

D084

B070

B004

D036

F043

F048

A151

B146

F120

B115

B062

F015

B063

B092

B137

A181

B162

A007

B149

A155

F102

B193

B206

B200

B207

T50

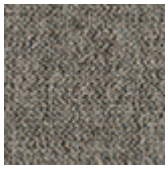
F104

D114

F123

D191

B201

B143

B165

F172

D111

A152

D026

B066

B094

F042

F027

D099

F020

D087

D033

F028

F090

F130

T60

D190 B138 F103 B139 D075 B167 B095

B140 F101 B208 D109 A174 A180 D037

B164 D038 F014 B061 B163 D100 F044

T70

D040 D074 A006 F127 B093 D025 F169

B132 D023 F122 F013 B196 F045 A175

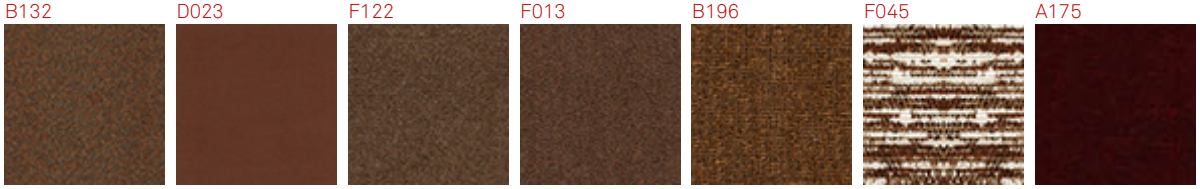

D039 F012 A009 F029 D134 D079 B197

CATTELAN ITALIA s.p.a. - Via Pilastri 19, 36030 Carrè, Vicenza, Italy - Phone: +390445318711 - Fax: +390445314289 - E-mail: info@cattelanitalia.com - www.cattelanitalia.com

T80

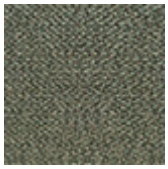
F105

D054
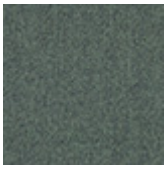
B166

F125

F018

A176

F107

B064

D110
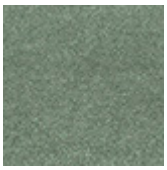
A010

B096

B202

D187

B065

D082

B144

B097
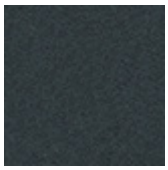
D024

A153

F021

D022

B178
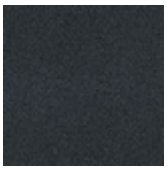
A179

D032

A177

T90

D078

B141

F173

B142

F124
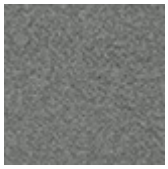
F034
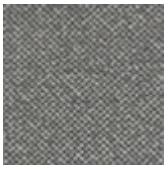
D047

F129

F126
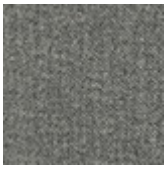
D086

B060

A156

B073

D085

B160

A008

D098

B147

B069

D053

D031

F017

B203

D188

GENERAL TERMS AND MAINTENANCE

The **SOFT LEATHER** is a natural material. A non uniformity in the wrinkle's drawing and small defects must be considered a feature that certifies the quality of leather. The leather undergo over time a slight discoloration, either with exposure to direct sunlight or to sources of heat. Be careful with straps, studs, buttons or other sharp metal objects that could scar the surfaces.
MAINTENANCE: It is a good practice to remove the dust, which often clogs the pores, not allowing the natural perspiration. Always use a soft, dry cloth. Avoid using brushes that can damage the surface. The removal of stain is extremely difficult as in the case of grease spots, ink and alcohol. Good results can be obtained by acting promptly with soapy water or mild detergent, rinse and wipe dry immediately with a soft cloth. Avoid alcohol, acetone, trichlorethylene, detergents or abrasives.

CATTELAN ITALIA **LEATHERS** are produced with selected cow leathers, tanned and dyed with products that do not contain substances harmful to human health, in full compliance with the current regulations.
MAINTENANCE: see the instructions for the soft leather.

The **SYNTHETIC LEATHER, SYNTHETIC NUBUCK and MICRO NUBUCK**is a special ecological fabric similar to leather or hide even if not realized with animal material. Has excellent physiological and hygienic qualities and is harmless from the toxicological point of view. It does not cause dust allergies. High resilience is finally a good guarantee of durability.
MAINTENANCE: requires no special care. In case of stains wipe with a damp cloth. Use neutral specific products. Do not use brushes, grease, petrol or acetone which will damage the surfaces.

FABRICS With regard to fiber composition, technical specifications and maintenance instructions, please find information on our website www.cattelanitalia.com Finishes section.

PAINT, LACQUER and EMBOSSED PAINTthe main features are light and corrosion resistant. The embossed painting also makes the surface more resistant to scratches, thanks to its grainy film.
MAINTENANCE: For normal cleaning, use a slightly damp soft cloth. Do not use abrasive cleaners, solvents, ammonia, acetone. In case of stains, remove them with a solution of mild soap and water, taking care to dry the wet surfaces.

The **WOOD** that is used for all CATTELAN ITALIA products is sourced only from the finest ecologically sustainable forest plantations and each piece has been treated using the least invasive processes as not to affect its natural beauty, but importantly guarantees the longevity and durability over the years of use. Wood is a natural material and as such, it will continue to change in appearance which will further enhance its natural look. Minor variations of tone, the presence of knots, veins and burn marks are all testament to the uniqueness and authenticity that each piece of wood will possess.
MAINTENANCE: Please read the care instructions for lacquer.

LAMINATE is a material highly resistant to shocks, water, steam, heat, stains, light, and chemical agents.
MAINTENANCE: To remove stubborn stains use a damp cloth with water and liquid detergent.

MARBLE and NATURAL STONES are protected by a layer of water-oil repellent that protects surfaces. The lead polishing gives to the slab's surface gloss and resistance to light and hard weather conditions, which gives a guarantee of excellent durability.
MAINTENANCE: For proper cleaning and surface protection of natural stone or granite use specific products according to their use. Do not use harsh detergents that can dull the surface and affect the water-oil repellent treatment. It is advisable to clean, protect and polish only with specific products for natural stone or granite for a long-term durability

The making of the **CERAMIC** used for all CATTELAN ITALIA ceramic tables is an innovative process. It begins with the wet grinding of natural materials such as clay, granite and ceramic particles that are in powder form, which then are all compacted down together in a process known as 'firing'.
MAINTENANCE: Ceramic tops should be cleaned with a wet sponge and a mild detergent. Do not use abrasive cleaning products. Do not use a steam cleaner. For best results, it is recommended that you use a limestone cleaning gel. It is best to remove fresh stains as quickly as possible as there is the potential risk that over time the stain can penetrate the pores of the ceramic. In the event that a stain has been present on the ceramic for some time, use a solution mixed from bicarbonate soda and water. Rub the surface, allowing the solution to penetrate the stain, and then wipe it off with a wet sponge.

CLAY is a thin, multi-layer coating and each layer is applied manually with a spatula and naturally dried. The processing is completed with a last protective coating to preserve the surface and the natural opacity of the material. Natural colours and finishes are the result of soils mixing during the production process of clay and its mixtures. The appearance of imperfections is to be considered as a distinctive feature of the hand-worked material.
MAINTENANCE: protect the surface from falling blunt objects, avoid direct contact with flames or very hot objects. For daily cleaning, use a soft cloth with water and mild neutral detergents and dry the surface with a soft cloth or absorbent paper. Remove food residues, liquids or greases within a few hours to avoid permanent stains.

GLASS, CRYSTALART and MIRRORS, all glass, tempered or not, have safety features such as to match the requirements.
MAINTENANCE: Avoid using abrasive materials that can damage the surface permanently. For the mirrors, it is recommended to use only a soft cloth dampened with alcohol.

POLYURETHANE belongs to a large class of compounds called polymers. Polyurethane is made through a process known as 'condensation' which allows the polyurethane to be moulded into any shape. Once the process of condensation is complete and the desired shape has been formed, the end result is that the shaped cannot be unchanged. As a result and by using the right elements, the desired requirement of softness and comfort can be met.
MAINTENANCE: For normal cleaning, use a damp cloth. Do not use abrasive cleaning products such as ammonia or solvents. To remove spots, use a solution mixed from water and mild soap and ensure that you dry the affected area immediately after wiping it.

INSTRUCTIONS

If you must assemble components, follow all instructions included in the packaging. Screws, bolts and other fastening parts should preferably be tightened by hand. Do not use power tools. In case of difficulty, please contact your dealer for any assistance. Do not use the product for uses other than those related to the category it belong.

DISPOSAL

After use do not dispose of the furniture in the environment. Entrust to specialized companies for the recovery and / or disposal.

WARRANTY

This Certificate of Guarantee apply to all CATTELAN ITALIA products, and is valid only in cases where the item purchased is defective or fails to fulfil compliance to the objective descriptions and aspects of quality and performance made by the seller or the producer. The warranty applies to the product up to 2 years after delivery (unless otherwise provided by national legislation). The warranty is supplied at the moment of the sale and is valid only in the presence of data and stamp of the dealer, the bill of lading or receipt. The warranty is valid only for defects of conformity existing at the delivery thereof and excludes any other type of defect source later if not objectively recognized. Are also excluded from application of the Warranty Certificate the following aspects: transport damage, damage or breakdown products as a result of improper handling and / or storage at the warehouse store or distributor, faults and deterioration from use, scratches and abrasions, stains, exposure to water, direct sunlight, excessive heat or cold, vandalism, misuse, misapplication and / or incorrect use of the product, improper handling of materials. Are also excluded from the guarantee products made from materials supplied by the customer and tampering or attempted repair of the goods without written permission by CATTELAN ITALIA

These information are based on data published in our latest online pricelist. Cattelan Italia reserves the right to change or improve any product without any notice.